SAP 012-108 DIN

SAP 012-108 DIN is a series of light weight casing piston pumps with a fixed displacement for demanding mobile hydraulics.

SAP 012-108 DIN covers the displacement range 12-108 cm³/rev. at a maximum pressure of 400 bar. It is a modern, compact pump which meets the market's high demands on flow performance, pressure, efficiency and small installation dimensions. The pump is either mounted directly on the power take-off or on a frame bracket via an intermediate shaft.

Other advantages:

- Light weight metal casing design
- Smooth operation over the entire speed range
- Long life due to high demands on material selection, such as bearings, seals, etc
- Corrosion free light metal-housing
- Less heat generation due to better ability to dissipate heat through housing

Sunfab Hydraulics AB, Box 1094, SE-824 12 Hudiksvall, Sweden. Tel: +46 650-367 00, Fax: +46 650-367 27, E-mail: sunfab@sunfab.se Web: www.sunfab.com

Versions, main data

Example

SA	P	-	084	L	-	N	-	DL4	-	L35	-	S0	S	-	0	00
Line	1		2	3		4		5		6		7	8		9	10

Line

SA	Sunfab Aluminium
P	Pump

2. Displacement

012	017	025	034	040	047	056	064	084	108

3. Direction of rotation

R	Right
L	Left

4. Sealing

N	Nitrile
V	HNBR *

* Only available for 040-108

5. Mounting flange

DL4	DIN 4-h (ISO 7653D)

6. Shaft

L35	DIN 5462 / ISO 14

7. Connection cover

S0	40° Sunfab standard

8. Connections

S	Sunfab standard

9. Additional

0	-

10. Accessories

00	No accessories available

Sunfab Hydraulics AB, Box 1094, SE-824 12 Hudiksvall, Sweden. Tel: +46 650-367 00, Fax: +46 650-367 27, E-mail: sunfab@sunfab.se Web: www.sunfab.com

SAP 012-108 DIN			012	017	025	034	040	047	056	064	084	108
Theoretical oil flow l/min							l/min					
at pump speed	rpm	500	6.3	8.5	12.7	17.1	20.6	23.5	28.0	31.8	41.5	54.0
		1000	12.6	17.0	25.4	34.2	41.2	47.1	56.0	63.6	83.6	108.0
		1500	18.9	25.5	38.1	51.3	61.8	70.6	84.0	95.4	125.4	162.0
Displacement	cm^3/rev		12.6	17.0	25.4	34.2	41.2	47.1	56.0	63.6	83.6	108.0
Max pump speed												
continuous	rpm		2300	2300	2300	2300	1900	1900	1900	1900	1600	1600
limited			3000	3000	3000	3000	2500	2500	2500	2500	2100	2100
Max working pressure	bar		400	400	400	400	400	400	400	400	400	400
Weight	kg		6.9	6.9	7.1	7.1	9.8	9.8	9.8	9.8	13.9	13.9
Dimensions	mm	A	97	97	97	97	113	113	113	113	122	122
		B	116	116	116	116	131	131	131	131	147	147
		C	206	206	206	206	235	235	235	235	264	264
		D	115	115	115	115	118	118	118	118	127	127
		E	102	102	102	102	115	115	115	115	133	133
		F	98	98	98	98	98	98	98	98	98	98
		G	106	106	106	106	106	106	106	106	106	106
		H	97	97	97	97	111	111	111	111	118	118
	ISO G	P	¾	¾	¾	¾	¾	¾	¾	¾	1	1
Tare-weight torque (M)	Nm		6.0	6.0	6.5	6.5	11.5	11.5	11.5	11.5	18.0	18.0
Direction of rotation	Left (L) or Right (R)											

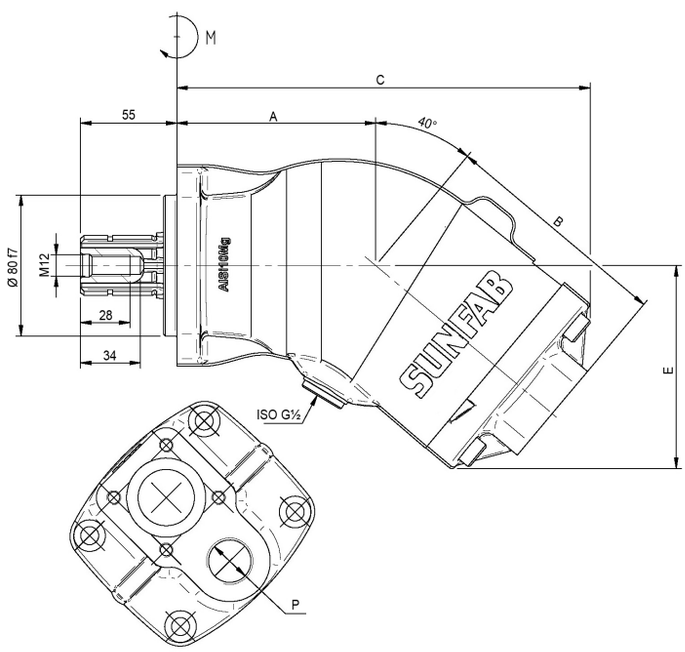

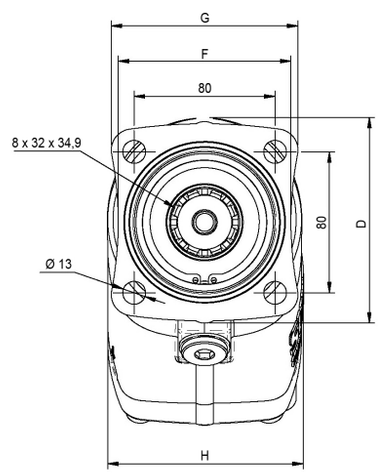

Spline shaft:
DIN 5462 / ISO 14
Mounting flange:
ISO 7653-D

Sunfab Hydraulics AB, Box 1094, SE-824 12 Hudiksvall, Sweden. Tel: +46 650-367 00, Fax: +46 650-367 27, E-mail: sunfab@sunfab.se Web: www.sunfab.com

WARNING

When the pump is running:

1. Do not touch the pressure hose
2. Watch out for rotating parts
3. The pump and hoses may be hot

Sunfab reserves the right to make changes in design and dimensions without notice. Printing and typesetting errors reserved.
© Copyright 2015 Sunfab Hydraulics AB. All Rights Reserved.

Sunfab Hydraulics AB, Box 1094, SE-824 12 Hudiksvall, Sweden. Tel: +46 650-367 00, Fax: +46 650-367 27, E-mail: sunfab@sunfab.se Web: www.sunfab.com